SWEDX
Your Digital Signage Partner

SWD550D-IP66 Technical Drawing

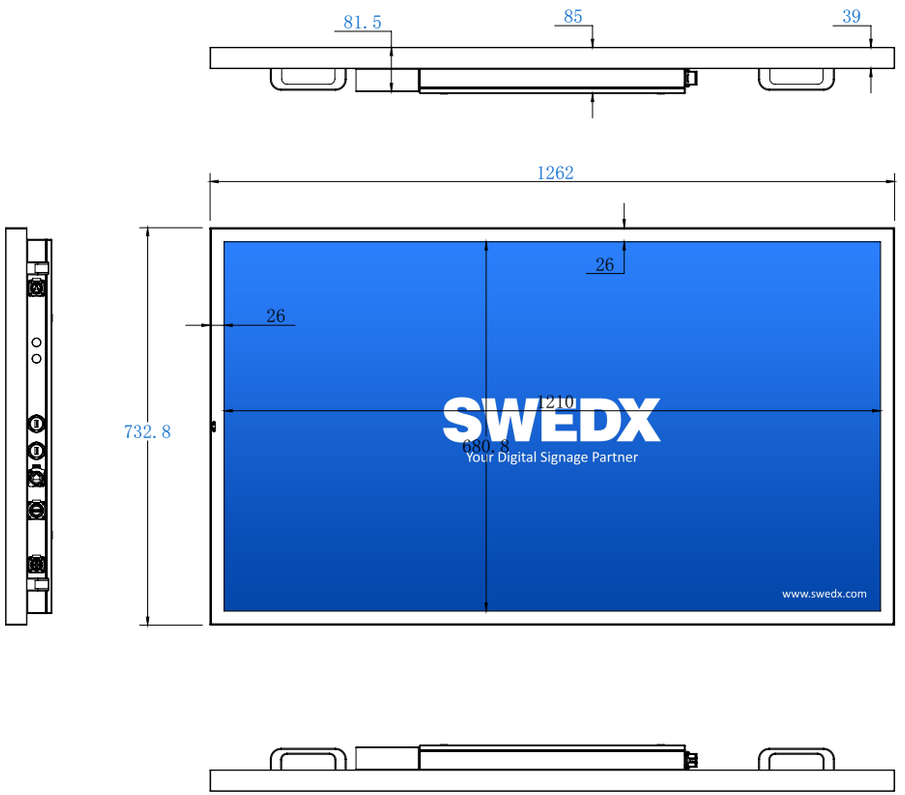

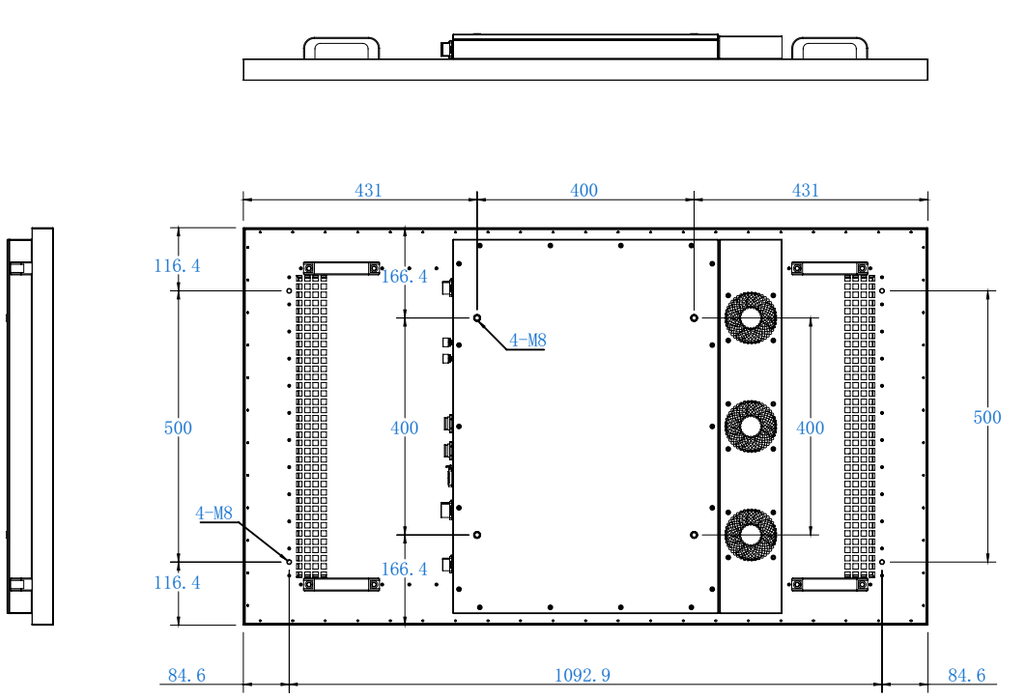

Units: mm

SWEDX Fagerstagatan 9 • 163 53 Spånga • ☎: +46 (8) 441 8 444 • 🖂: www.swedx.com • 🖂: info@swedx.com