DS SERIES

DS752LT5

75" Ultra HD High Brightness 4,500 Nits Digital Signage



SUNLIGHT VIEWABLE IMAGE

4K ULTRA HD

4K UHD RESOLUTION

BUILT-IN MEDIA PLAYER

THERMAL MANAGEMENT

TRUECOLOR™ CALIBRATED

Android is a trademark of Google LLC.
The Android robot is reproduced or modified from work created and shared by Google and used according to terms described in the Creative Commons 3.0 Attribution License.

FOR MORE INFOMATION

For more information about DynaScan, visit our website at www.dynascandisplay.com. Copyright © DynaScan Technology Inc. All rights reserved. All specifications and descriptions are subject to change without notice. Reproduction without permission is prohibited.

DynaScan

V1.10

SPECIFICATION

MODEL		DS752LT5
PANEL	**LCD Panel Size**	74.52"
	Native Resolution	3840 x 2160
	Brightness	4500 nits
	Color Depth	10 bits
	Contrast Ratio	3000 : 1
	Response Time (Typ.)	8 ms (Typ.)
	Viewing Angle	178° / 178°
	Light Lifetime (Typ.)	100,000 hrs
	Blackening Defect Free	Up to 110°C (230°F)
	Viewable With Polarized Lenses	Yes
POWER	**Power Supply**	Internal
	Rated Voltage	100-240V ~ 50/60HZ
	Power Consumption (Max.)	420 W / 800 W
	Power Saving Mode	< 1 W
	AC out	<100 W
MECHANICAL SPECS	**Bezel Width (T/B/L/R)**	17.0 / 17.0 / 16.5 / 16.5 mm
	Cabinet Color	Black
	Monitor Dimension (LxHxD)	1688.0 x 967.5 x 93.6 mm
	Monitor Weight	58 kg
	Orientation	Portrait / Landscape
	VESA Mounting (LxH)	800 x 400 mm
	Carrying Handles	Yes
FEATURE	**Language**	English
	Support SNMP (Up to V3.0)	Yes
	Image Retention Protection	Yes
	Auto Orientation Sensor	Yes
	Ambient Light Sensor	Yes
	Power On/Off Scheduling	Yes
	OSD Menu Rotation	Yes
INPUT	**HDMI 2.1 (HDCP 2.3)**	x2 (2160p)
	DisplayPort 1.2	x1
	USB 3.0	x1
	Micro SD Slot	x1
OUTPUT	**Audio**	x1
EXTERNAL CONTROL	**RS-232**	In x1
	RJ-45	x2 (LAN)
	ETK Port (Thermal)	x1
	ESK Port (IR, Ambient)	x1
ENVIRONMENT	**Operating Temperature**	0°~ 45° C
	Storage Temperature	-20°~60° C
	Humidity	10% ~ 80% RH Non-condensing
INTERNAL PLAYER	**Operating System**	Android 8.0.0
	Processor	Dual-core A73 and dual-core A53
	Clock Speed	1.5GHz
	Main Memory Interface	DDR4, 2G
	Grapics	Quad-core MaliG51
	Storage	Internal: 16GB eMMC Flash
		External: Support Micro SD , Up to 128GB(FAT32/NTFS)
	Multimedia	4K 10bits VP9/H265/H264 video decoders, up to 60fps
		1080P other video decoders (VC-1, MPEG-1/2/4, VP8)
	Wireless Function	YES
CERTIFICATION	**CE / FCC / RoHS**	

DIMENSIONS

Unit: mm [inch]

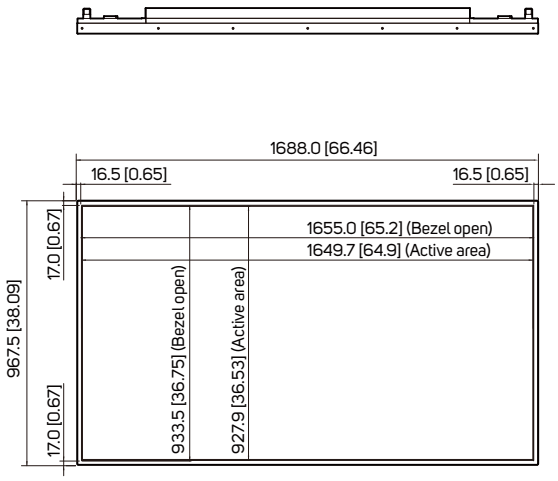

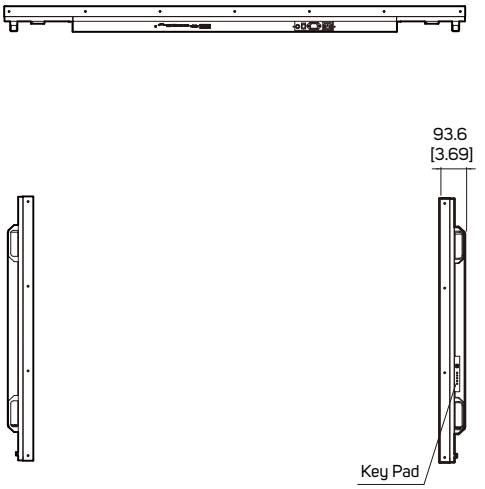

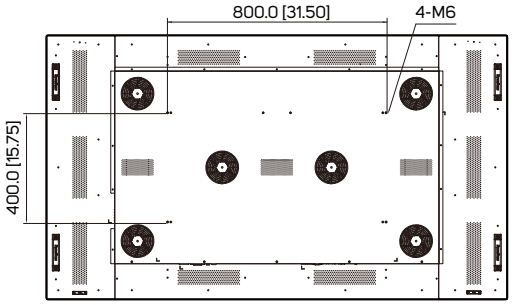

INTERFACE

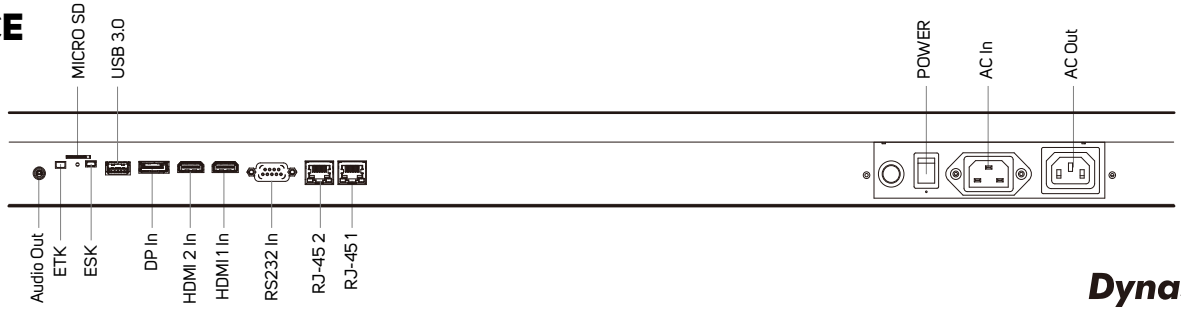

DynaScan